23 845 003 **GROHE PLUS 3-HOLE BATH/SHOWER COMBINATION**

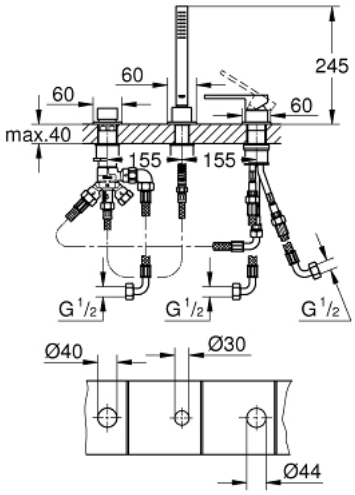

PRODUCT DESCRIPTION

- Colour: chrome
- three hole installation
- GROHE SilkMove 35 mm ceramic cartridge
- with temperature limiter
- GROHE Long-Life finish
- consists of:
- single lever mixer operating element
- automatic diverter: bath/shower
- without spout
- Euphoria Cube hand shower 7.6 l/min
- metal shower hose 2000 mm (always chrome for any colour of the set)
- flexible connection hoses
- connection for shower hose
- Protected against backflow
- for use with baseframe 29 037 002 (please order separately)
- for combination with 28 990 / 28 991
- minimum pressure 1,0 bar