38 519 001 **RAPID SL ELEMENT FOR WC WITH FLUSH VALVE, 1.13 M INSTALLATION HEIGHT**

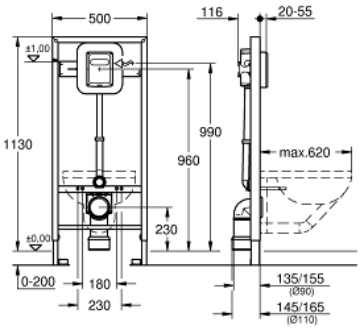

PRODUCT DESCRIPTION

- Colour: chrome
- with flush valve 6 - 9 l
- for manual / electronic actuation
- for on-the-wall installations or studded walls
- steel frame with foil coating/hot galvanized,self-supporting
- for dry-cladding, completely pre-assembled
- quick adjustment, lockable
- fixing material
- TÜV approved
- 2 WC fixing bolts
- distance of fixing bolts 180/230 mm
- WC ceramics with small bearing area (less than 205 mm) require additional accessory 38 779 000
- PP outlet bend Ø 90 mm
- depth adjustable
- PP reducer Ø 90/110 mm
- inlet and outlet connecting set
- manual/electronic actuation
- adjustable
- low noise (group I acc. to German Noise Specification)
- ¾"
- stop valve
- 6 - 9 l adjustable
- flush bend
- flow rate adjustment
- for on-the-wall installation please order wall brackets 38 558 00M (sold separately)