Pure Freude an Wasser

GROHE

38 713 001 **RAPID SL**
FOR WALL-HUNG WC

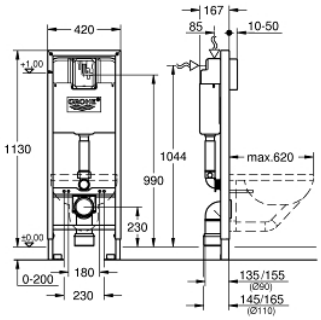

PRODUCT DESCRIPTION

- flushing cistern 6 l
- 1.13 m installation height
- 0.42 m wide
- for on-the-wall installations or studded walls
- powder coated steel frame, self-supporting
- for dry-cladding, completely pre-assembled
- with fixed connections
- quick adjustment, lockable
- fixing material
- TÜV approved
- 2 WC fixing bolts
- fixing device for ceramic
- distance of fixing bolts 180/230 mm
- outlet bend Ø 90 mm
- depth adjustable
- reducer Ø 90/110 mm
- inlet and outlet connecting set
- pneumatic discharge valve offering 3 modes of operation: dual flush or start/stop or single flush
- water supply from top or back
- low noise (group I acc. to German Noise Specification)
- insulated against condensation
- ½" water supply connection including integrated angle valve and push fit flexible hose union
- without accessories for on-the-wall installation